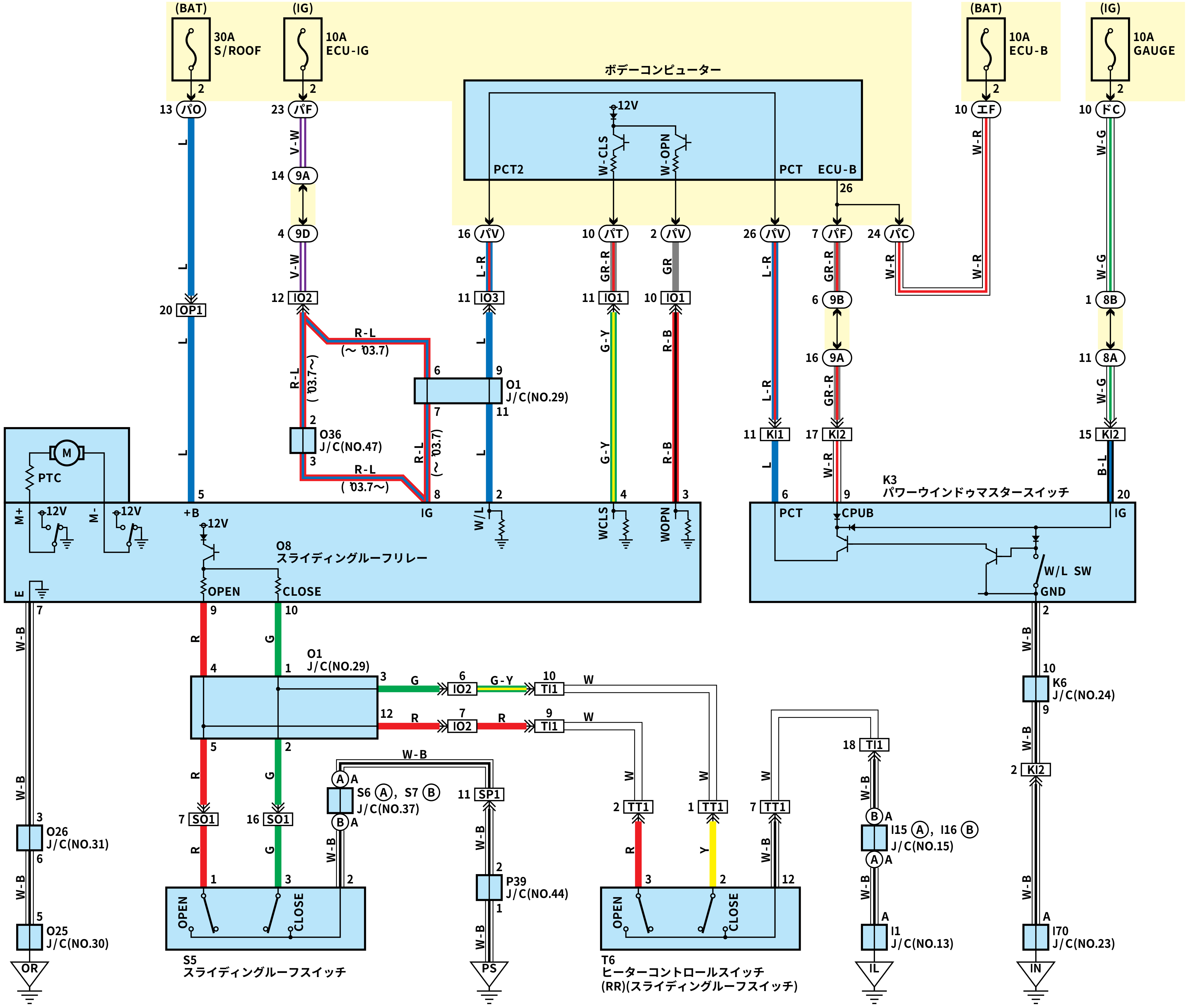

HISAT047
X339I0307000253